4/8/16 Ports ArtNet TTL LED Controller

LNX-364SP LNX-368SP LNX-370SP

Configuration Manual

Ver 3.00

LINETX Technology Co., Ltd.

2020.04

This manual is the technical manual of LNX-368SP/LNX-364SP/LNX-370SP LED controller, applicable to LNX-368SP/LNX-364SP/LNX-370SP series sub-models, the software version is V2.01 and above compatible software version.

LNX-368SP/LNX-364SP/LNX-370SP sub-models are shown in the table below.

Label	Type	Ports	Universes	Software	Hardware
LNX-364SP	LNX-364SP	4	24	V300	V204
LNX-368SP	LNX-368SP	8	48	V300	V204
LNX-370SP	LNX-370S	16	96	V300	V204

This manual was written and published by LINETX Technology Co., Ltd., and has the final right to interpret related products.

The follow-up upgrade of related products may be slightly different from this manual, and the upgrade of the manual may not inform you in time. Please pay attention to the discrepancies between the actual product and the description in this manual.

For more product information, please visit: www.linetx.com

Technical Email: tech@linetx.com

Contents

1. INTRODUCTION 4

1.1. BRIEF 4

1.2. FEATURES 5

2. INTERFACE OF LNX-368SP/LNX-364SP/LNX-370SP 6

3. LED WIRING BLOCK 8

4. . LED CONTROLLER CONFIGURATION 9

4.1. USE WEB TO CONFIGURE THE CONTROLLER 9

4.2. CONFIGURE DEVICE 9

4.3. CONFIGURE PORT 11

4.4. CONFIGURE LED TAPE PARAMETERS 12

4.5. CONFIGURE NETWORK 13

4.6. RESET DEVICE 14

1. Introduction

1.1. Brief

LNX-368SP/LNX-364SP/LNX-370SP LED controller is a small size with powerful capability pixel controller. 1-6 universes supported for each ports, and with maximum 16ports that can achived totally 96 universes. it is suitable for large pixel lighting project, especially when the installation space is relatively limited.

LNX-368SP/LNX-364SP/LNX-370SP supports the ArtNet-4, supports any LED ArtNet software , such as LnxEffect, MADRIX, Madmapper, JINX, etc.

LNX-368SP/LNX-364SP/LNX-370SP supports types of pixel tape on the market, such as WS2811, WS2812, GS1903, SM16703, UC1903, TM1903 etc. and even you can customize timing of LED IC to support the tape that not in list.

LNX-368SP/LNX-364SP/LNX-370SP have WEB management system, all parameter of device can be configured by WEB, and device has a tape testing mode, which can quickly test the tape.

LNX-368SP/LNX-364SP/LNX-370SP has a real-time Gamma correction function. When Gamma correction function is turned on, the required Gamma correction value can be configured to perform Gamma color correction on the connected light strip.

LNX-368SP/LNX-364SP/LNX-370SP has dual 100M Ethernet port to support cascading wring.

1.2. Features

- **ArtNet**: Support the latest ArtNet-4 version, support all software with ArtNet
- **Multi Ports**: Each port has 6 universes, 96 universes maximum, up to 16320 RGB points;
- **Small Size**: Size is 7*10*3cm, which can be easily installed in any place
- **Dual Ethernet Port:** No external switch required, easily to connect each device hand in hand
- **Gamma Correction**: Built-in Gamma correction function
- **Test Mode**: LED tape test mode, test the LED tape by one click;
- **WEB**: Support WEB managment, all setting can be configured through WEB browser;
- **Multi-chip supported**: Support variety type of TTL LED chips,
- **Customize IC**: Support custom IC parameter for new LED IC that not in list
- **Wide voltage input**: Wide DC voltage power supply (7-55V) supported
- **Anti-reverse protection**: Built-in anti-reverse protection circuit to avoid reverse connection
- **Drive Protection**: Built-in LED drive protection circuit to avoid potential harm to circuit
- **System Reset**: The system parameters can be factory reset for wrong configuration

……

2. Interface of LNX-368SP/LNX-364SP/LNX-370SP

Power Supply and LED tape GND (From top to bottom):
1. Vin (DC7-48V): DC Positive Supply
2. V- : DC Negative power supply
3. GND: LED tape GND
4. GND : LED tape GND
5. GND: LED tape GND

Dual Ethernet Ports:
ETH1 and ETH2 are two Ethernet ports, which can connect to PC or each LED master and slave devices hand by hand。

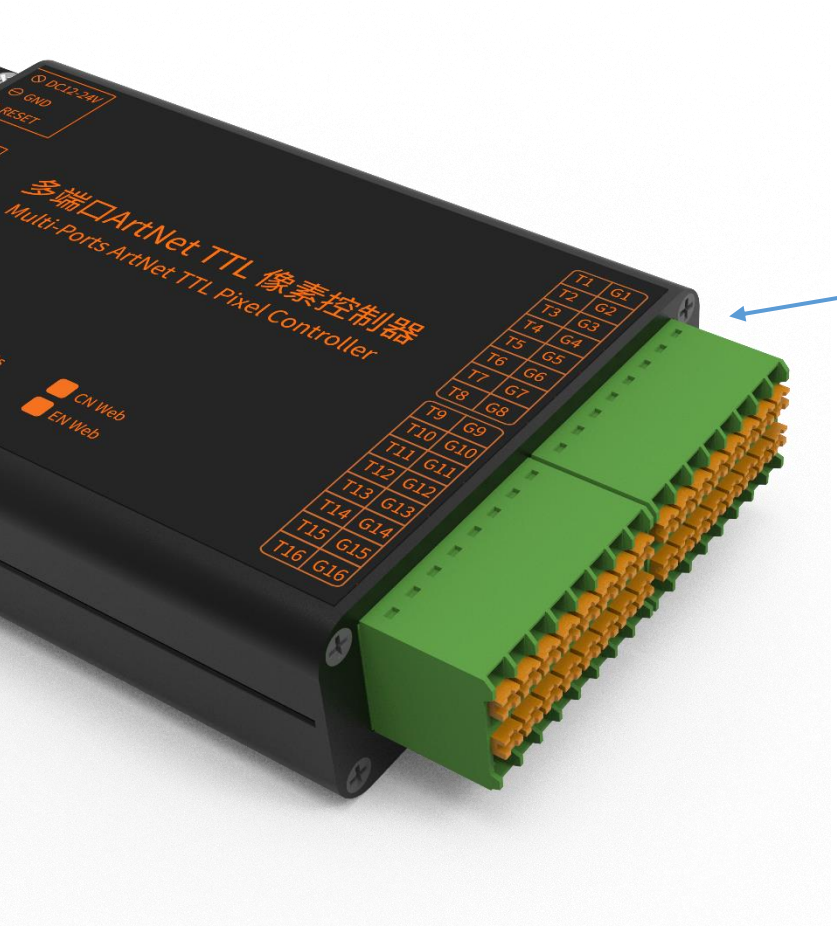

P1-P16 are TTL/SPI signal output ports, which can be connected to drive light strip such as WS2811/WS2812/GS1903.

3. Device Wiring Block

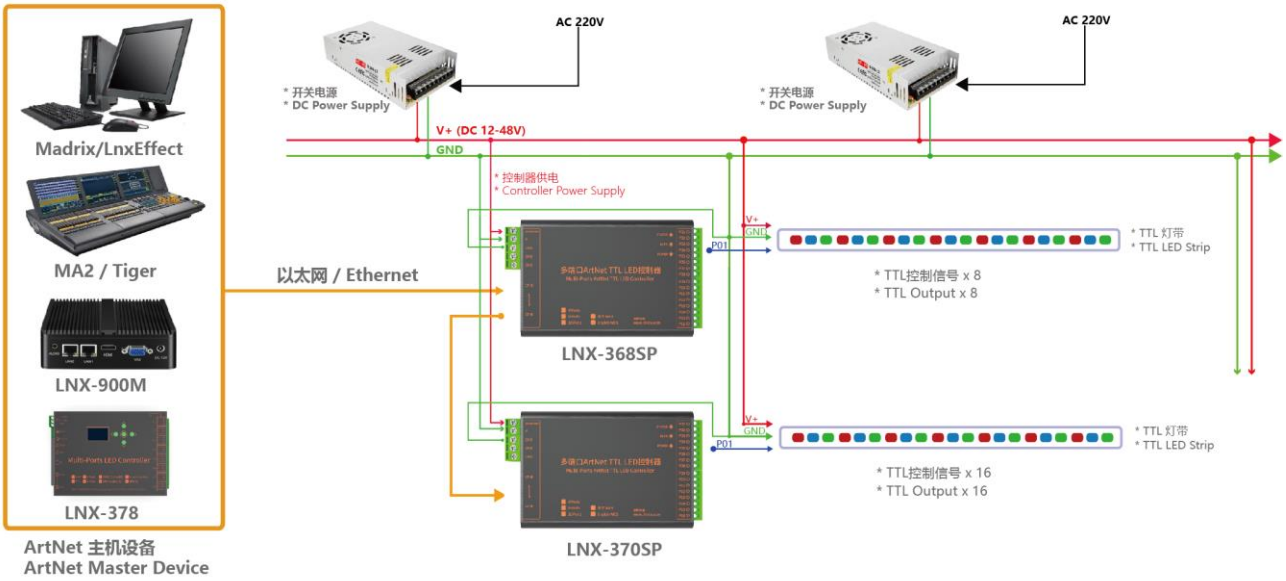

4. LED Controller Configuration

4.1. Use WEB to configure the device

LNX-368SP/LNX-364SP/LNX-370SP supports using WEB browser to configured, The default IP address of is 192.168.1.21, and the subnet mask is 255.255.255.0. The PC' s network segment should be same as LNX-368SP/LNX-364SP/LNX-370SP.

Open the WEB browser, enter the IP address of the LED controller in the address bar to access device, as shown in Figure 2-1:

Figure 2-1 WEB configuration page

The left side of the page is the navigation bar, and the right side is the configuration area.

If access the WEB failed, Please try to factory restore device (press reset button before power on, and 15S to release the button)

4.2. Configure Device

Configure the run mode of the device. LNX-368SP/LNX-364SP/LNX-370SP have two run mode for

different function.

At WEB page, click the [Config Device] navigation bar on the left to enter the [Configure device] page, as shown in Figure 2-2:

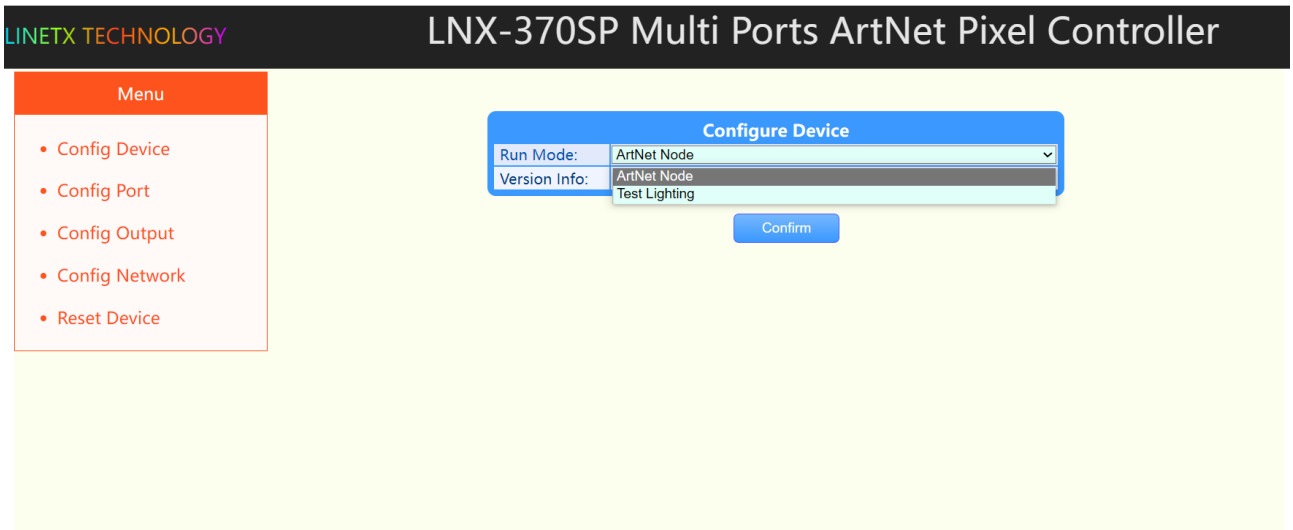

Figure 2-2 Configure Device Page

The configurable items are shown in Table 2-1:

Table 2-1 Configuration items

ID	Item	Description
1	Run Mode	Configure the run mode of the device, see Table 2-2 for details

The configuration of the run mode are shown in Table 2-2:

Table 2-2 Run Mode

ID	Item	Description
1	ArtNet Node Mode	The normal run mode of the controller. In this mode, the controller receives ArtNet control data and drives the connected light strip on each ports.
2	Test Lighting Mode	The mode used to test the light strip installed on ports, the controller runs in this mode will generate test signal to drive LED tape to show test effect.

After change the run mode, the controller will reset, and it will take about 5 seconds to reboot.

4.3. Configure Port

Configure to enable/disable each output port of device, config universe address of port, config RGB pixel order of LED tape .etc

On WEB page, click the [Config Port] navigation bar in the left to enter the port setting page, as shown in Figure 2-6:

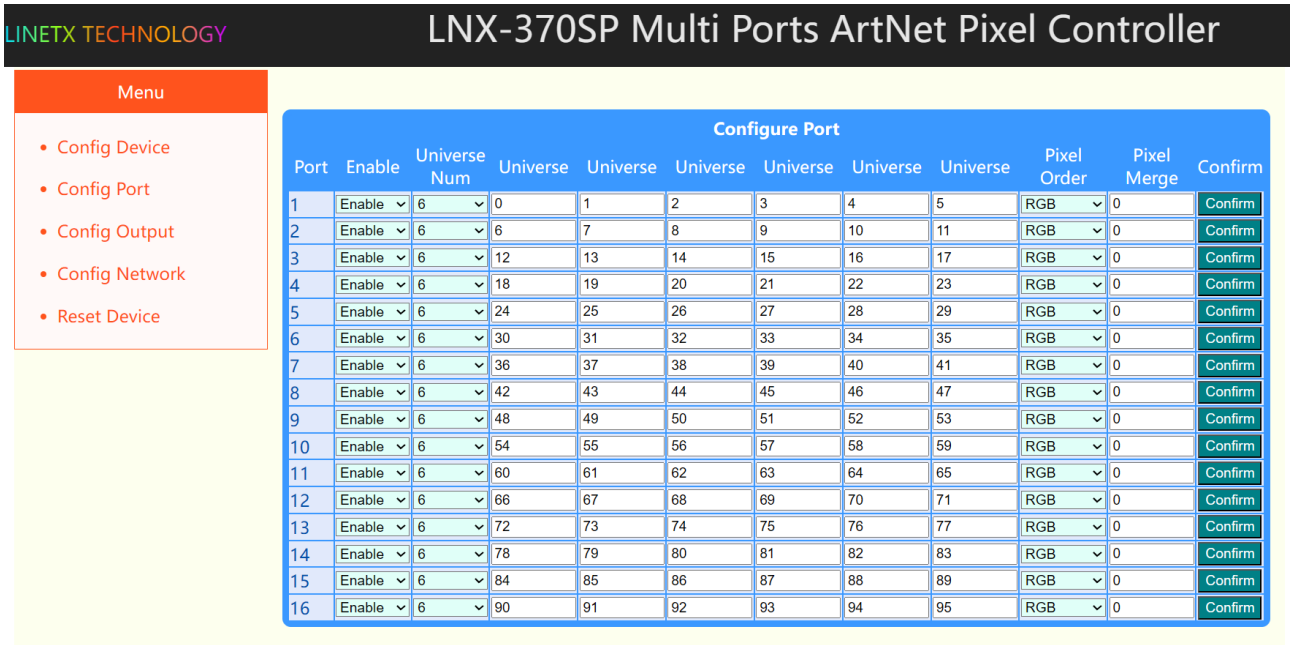

Port	Enable	Universe Num	Universe	Universe	Universe	Universe	Universe	Universe	Pixel Order	Pixel Merge	Confirm
1	Enable	6	0	1	2	3	4	5	RGB	0	Confirm
2	Enable	6	6	7	8	9	10	11	RGB	0	Confirm
3	Enable	6	12	13	14	15	16	17	RGB	0	Confirm
4	Enable	6	18	19	20	21	22	23	RGB	0	Confirm
5	Enable	6	24	25	26	27	28	29	RGB	0	Confirm
6	Enable	6	30	31	32	33	34	35	RGB	0	Confirm
7	Enable	6	36	37	38	39	40	41	RGB	0	Confirm
8	Enable	6	42	43	44	45	46	47	RGB	0	Confirm
9	Enable	6	48	49	50	51	52	53	RGB	0	Confirm
10	Enable	6	54	55	56	57	58	59	RGB	0	Confirm
11	Enable	6	60	61	62	63	64	65	RGB	0	Confirm
12	Enable	6	66	67	68	69	70	71	RGB	0	Confirm
13	Enable	6	72	73	74	75	76	77	RGB	0	Confirm
14	Enable	6	78	79	80	81	82	83	RGB	0	Confirm
15	Enable	6	84	85	86	87	88	89	RGB	0	Confirm
16	Enable	6	90	91	92	93	94	95	RGB	0	Confirm

Figure 2-6 Port configuration page

The configurable items for port configuration are shown in Table 2-3:

Table 2-3 Configuration items:

ID	Item	Description
1	Enable	Enable or disable the output TTL port. When the port is disabled, no control signal will be output, and ArtNet master device will not be able to search the universe address contained in the port.
2	Universe Number	Each TTL port contain 1-6 universe spaces, and the position of the controllable light strip will correspond to the universe address.

3	Universe Address	Configure the universe address of the output port. Each port contains up to 6 universe. The address of each universe can be configured separately, but it must follow certain rules: According to the requirements of the Art-Net protocol, the same The net address of each device must be the same, and the subnet address of each port must be the same. The universe address of the port configured by the user already contains the information of the net and subnet, that is, net is the LSB value of the universe, and the subnet is the universe. The 4-LSB value of the low 8 bits. The net address of the device must be keep the same, For example, the address 0 of port 1 is 323, then the net address of the device is 1, the subnet address is 4, and the net addresses of other ports will be automatically determined as 1. The subnet address of the port must keep the same. For example, if the address of port 1 is 30, the subnet of the device is 1, and the subnet of other addresses of the port will be automatically determined as 1. If the configuration address is mismatched, controller will be automatically corrected it.
4	Pixel Order	Configure the pixel order of the LED tape. The output pixel order can be configured as RGB/RBG/BRG/BGR/BRG/BGR. When the red, green and blue colors of the light strip do not match the original design, the value can be modified until it is correct.

4.4. Configure LED tape parameters

LNX-368SP/LNX-364SP/LNX-370SP supports a variety type of LED chip IC, such as WS2811, WS2812, SM16703, GS1903, UC1903, TM1803, etc. When the list does not have the matched chip IC, you can select to customized the IC timing to support this new type of LED IC.

On WEB configuration page, click the [Config LED tape] navigation bar in the left to enter the light strip configuration page, as shown in Figure 2-7 below:

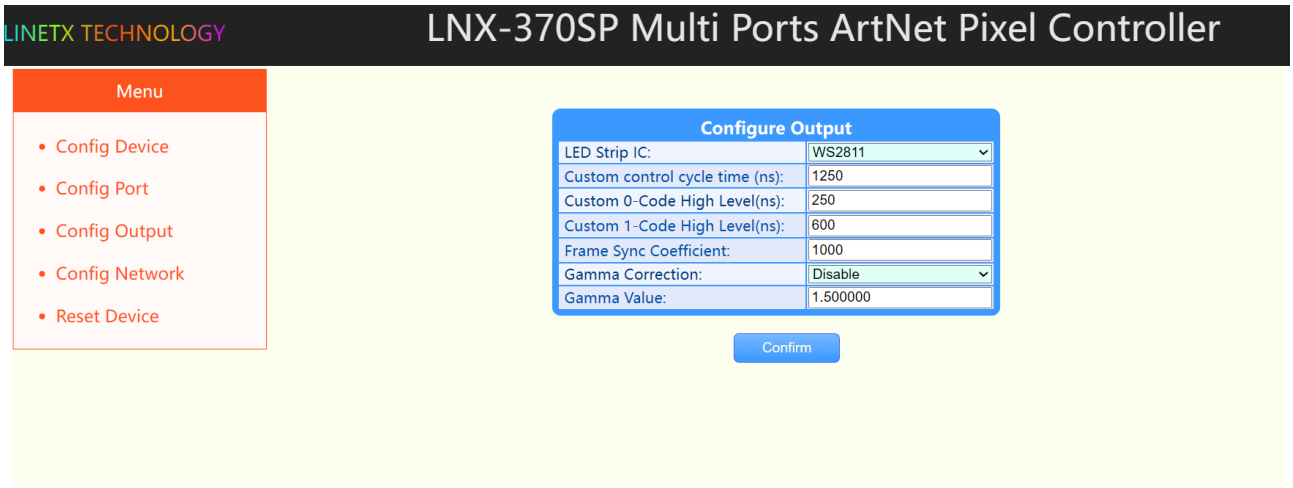

Figure 2-7 Configure LED tape Page

The configurable items of LED tape are shown in Table 2-4:

Table 2-4 Configuration items

ID	Item	Description
1	LED tape IC	Select the type of LED tape IC supported by the controller. If the type of LED chip that is not in the list, you can choose CUSTOMIZED to custom new type of LED chip.
2	Control Cycle	If the LED chip type is CUSTOMIZED, this value defines the cycle time of a data code, unit is nanoseconds, and this parameter can be find at IC's datasheet..
3	0-Code High Level	If the LED chip type is CUSTOMIZED, this value defines the 0-code high level time of a data code, unit is nanoseconds, and this parameter can be find at IC's datasheet..
4	1-Code High Level	If the LED chip type is CUSTOMIZED, this value defines the high level time of 1-code of a data code, unit is nanoseconds, and this parameter can be find at IC's datasheet..
5	Gamma Correction	Whether to turn on the light strip gamma correction function.
6	Gamma Value	If Gamma correction is turned on, the color of the LED light strip will be corrected according to this value. Greater than 1 is the lower-curve correction, less than 1 is the upper-curve correction, the default is 1.5.

4.5. Configure Network

Configure the controller's network IP address, subnet mask, gateway address and other network parameters.

On WEB configuration page, click the [Config Network] navigation bar in the left to enter the network setting page, as shown in Figure 2-10:

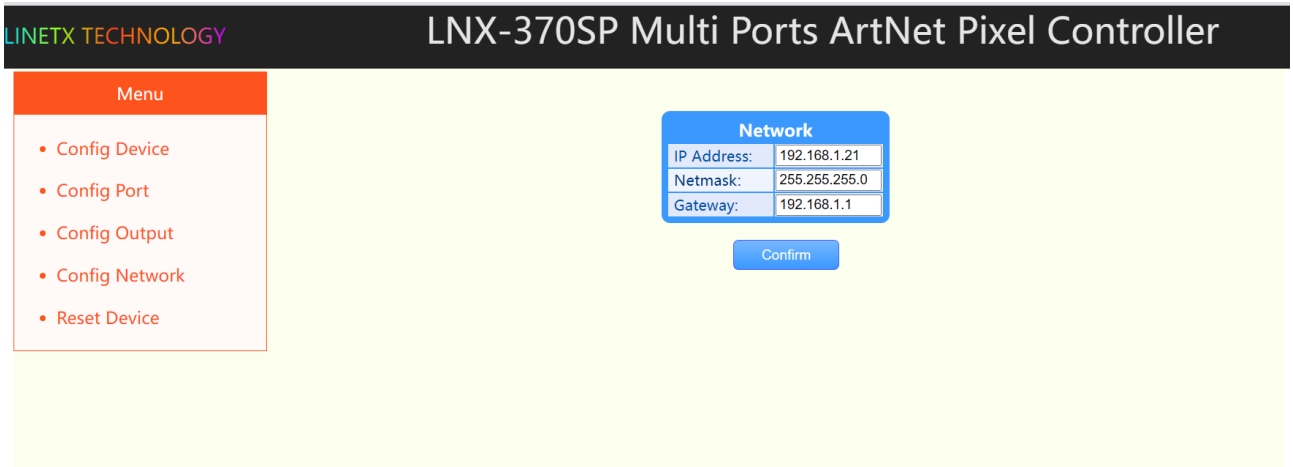

Figure 2-10 Network configuration page

The configurable items of network are shown in Table 2-7:

Table 2-7 Network configuration items

ID	Item	Description
1	IP Address	Configure the IP address of the controller
2	Netmask	Configure the netmask address of the controller
3	Gateway	Configure the gateway address of the controller

4.6. Reset Device

Restart the controller, or restore the system parameters.

On WEB configuration page, click the [Reset Device] navigation bar on the left to enter the reset system page, as shown in Figure 2-11:

Figure 2-11 Reset system interface

The configurable items of the reset system are shown in Table 2-8:

Table 2-8 Reset system configuration items

ID	Item	Description
1	Reset Device	Click the Confirm button to restart the controller.
3	Restore Parameter	Click the confirm button to restore the device parameters to the factory settings.